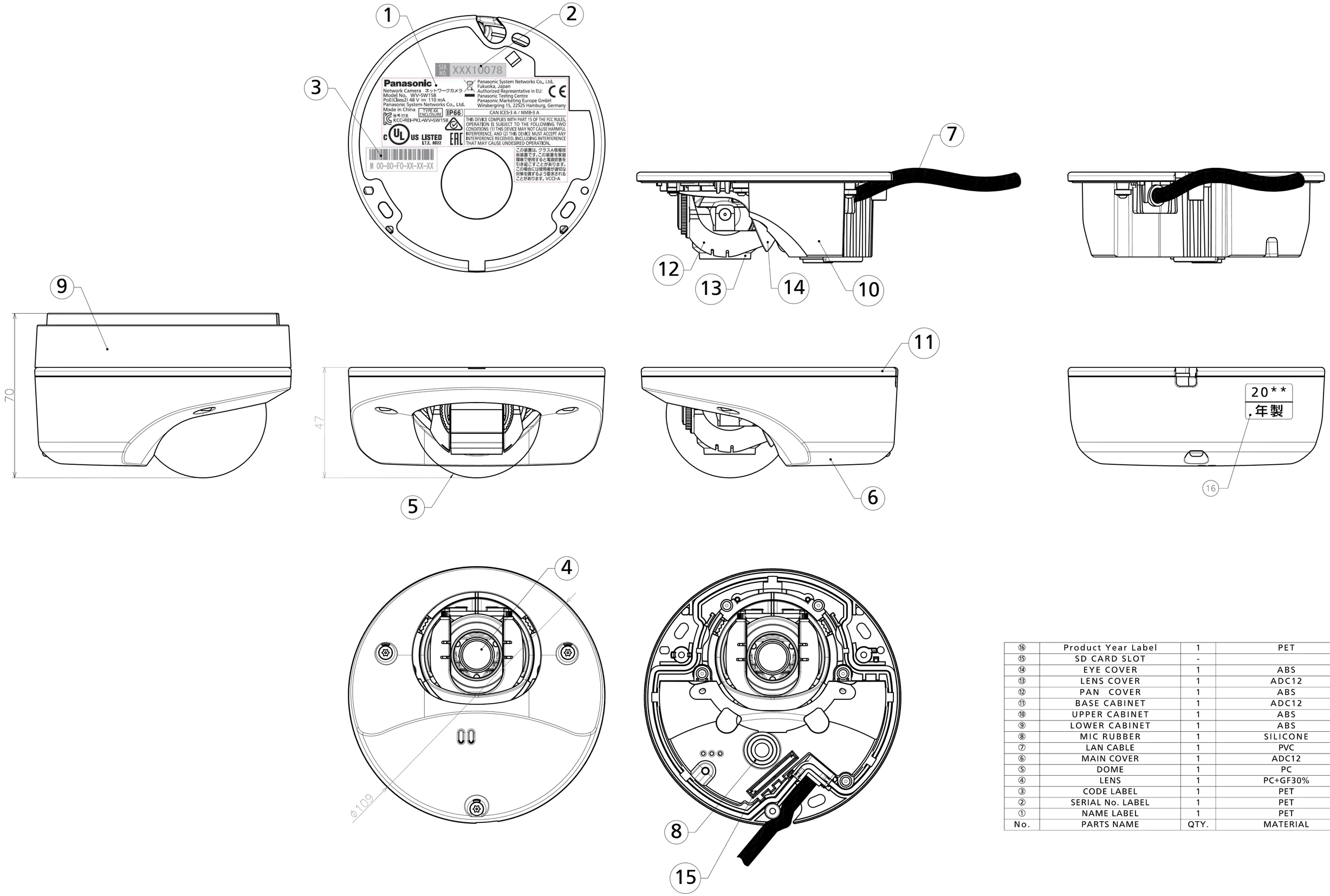

No.	PARTS NAME	QTY.	MATERIAL
⑯	Product Year Label	1	PET
⑮	SD CARD SLOT	-	
⑭	EYE COVER	1	ABS
⑬	LENS COVER	1	ADC12
⑫	PAN COVER	1	ABS
⑪	BASE CABINET	1	ADC12
⑩	UPPER CABINET	1	ABS
⑨	LOWER CABINET	1	ABS
⑧	MIC RUBBER	1	SILICONE
⑦	LAN CABLE	1	PVC
⑥	MAIN COVER	1	ADC12
⑤	DOME	1	PC
④	LENS	1	PC+GF30%
③	CODE LABEL	1	PET
②	SERIAL No. LABEL	1	PET
①	NAME LABEL	1	PET